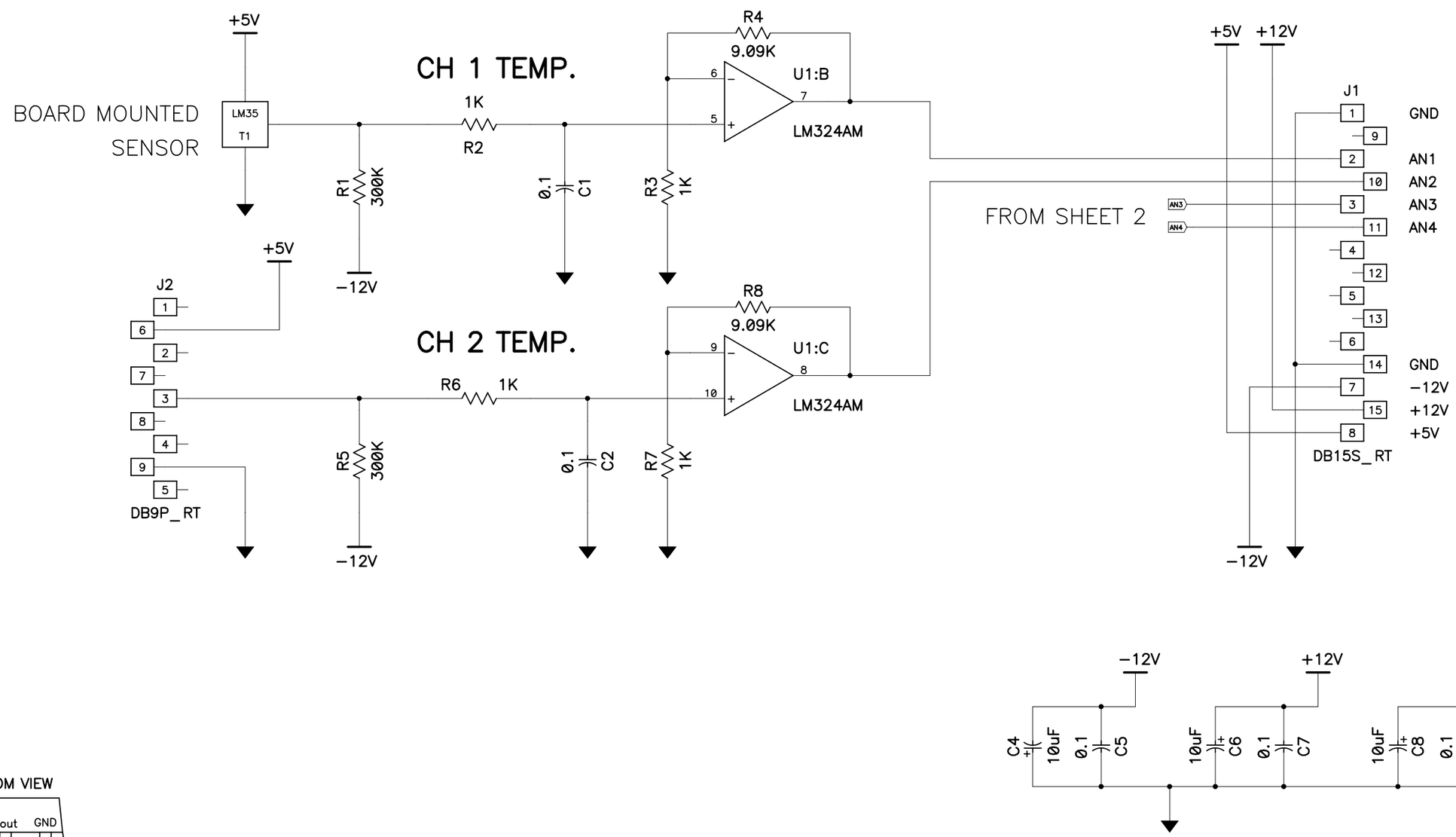

BOTTOM VIEW

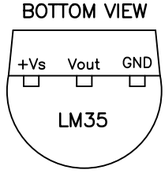

B

REVISIONS

04-14-04 CHANGED BOARD NAME TO 4 CHANNEL FROM 3 CHANNEL
11-24-04 ADDED LABEL FOR 4TH ANALOG SIGNAL (AN4)

UNIVERSITY OF CALIFORNIA LICK OBSERVATORY	4 CHANNEL TEMPERATURE SENSOR BOARD

DES'N BY: B. Alcott	ORIGIN DATE: 03-17-04	DWG. NO. EL-1356	NUM. 1 OF 2
Last SN	MODIFY DATE: 11-24-04		REV. A
PRINT TIME: 11:29:59	PRINT DATE: Fri Mar 06, 2009		
PATH: GENERAL\EL-1365\4ch_temp_sensor		4ch_temp_sensor.sch	

NUM. 1 OF 2

4 CHANNEL TEMPERATURE SENSOR BOARD

EL-1356