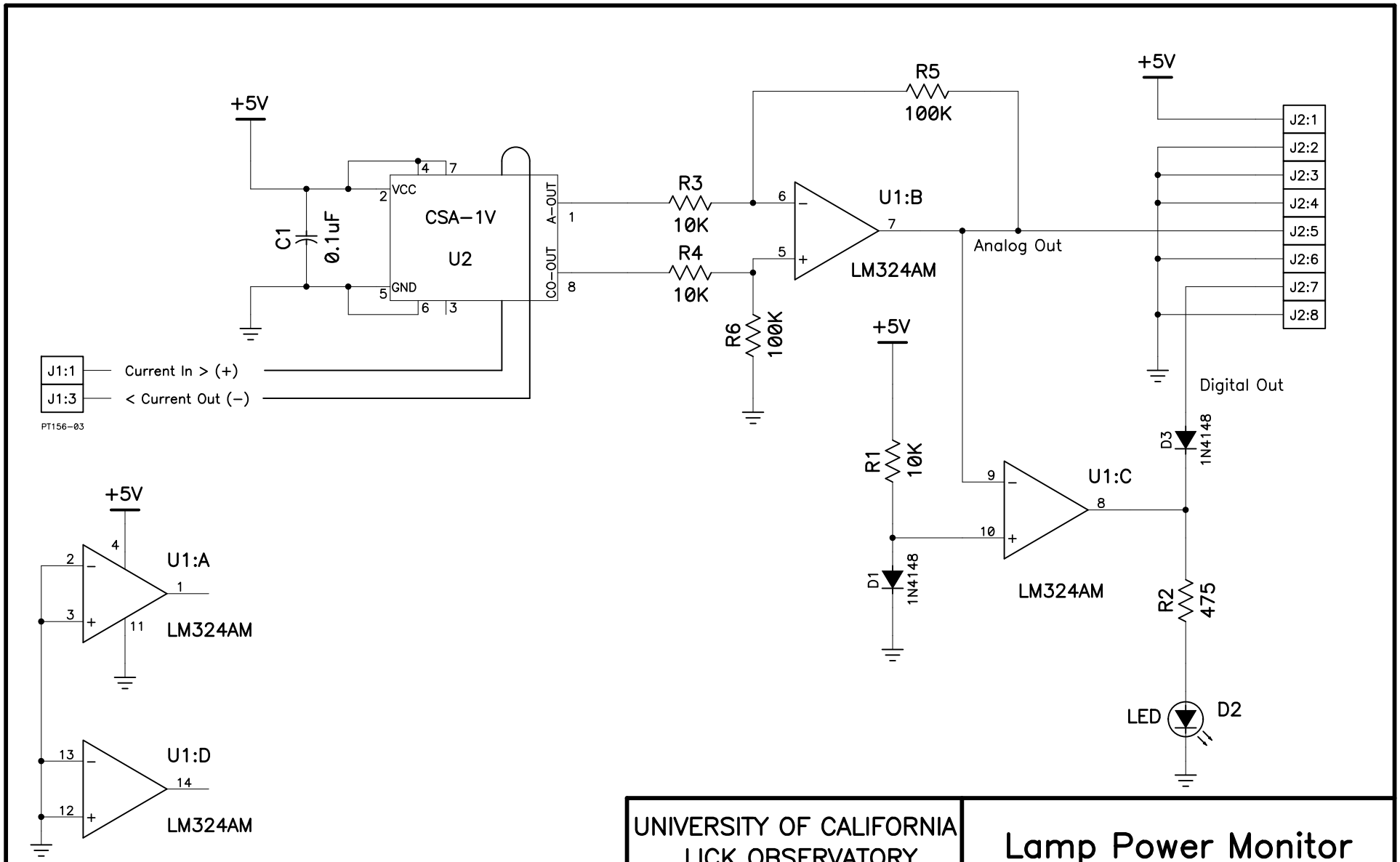

REVISION

UNIVERSITY OF CALIFORNIA LICK OBSERVATORY	Lamp Power Monitor
DES'N BY: Ken Dietsch/TC	ORIGIN DATE: 05-25-05
Last SN	MODIFY DATE:
PRINT TIME: 11:22:56	PRINT DATE: Wed Apr 21, 2010
DWG. NO. EL-1384	NUM. 1 OF 1 — REV. C
PATH: Multipurpose/EL-1384_LmpPwrMon/	EL-1384_C.sch