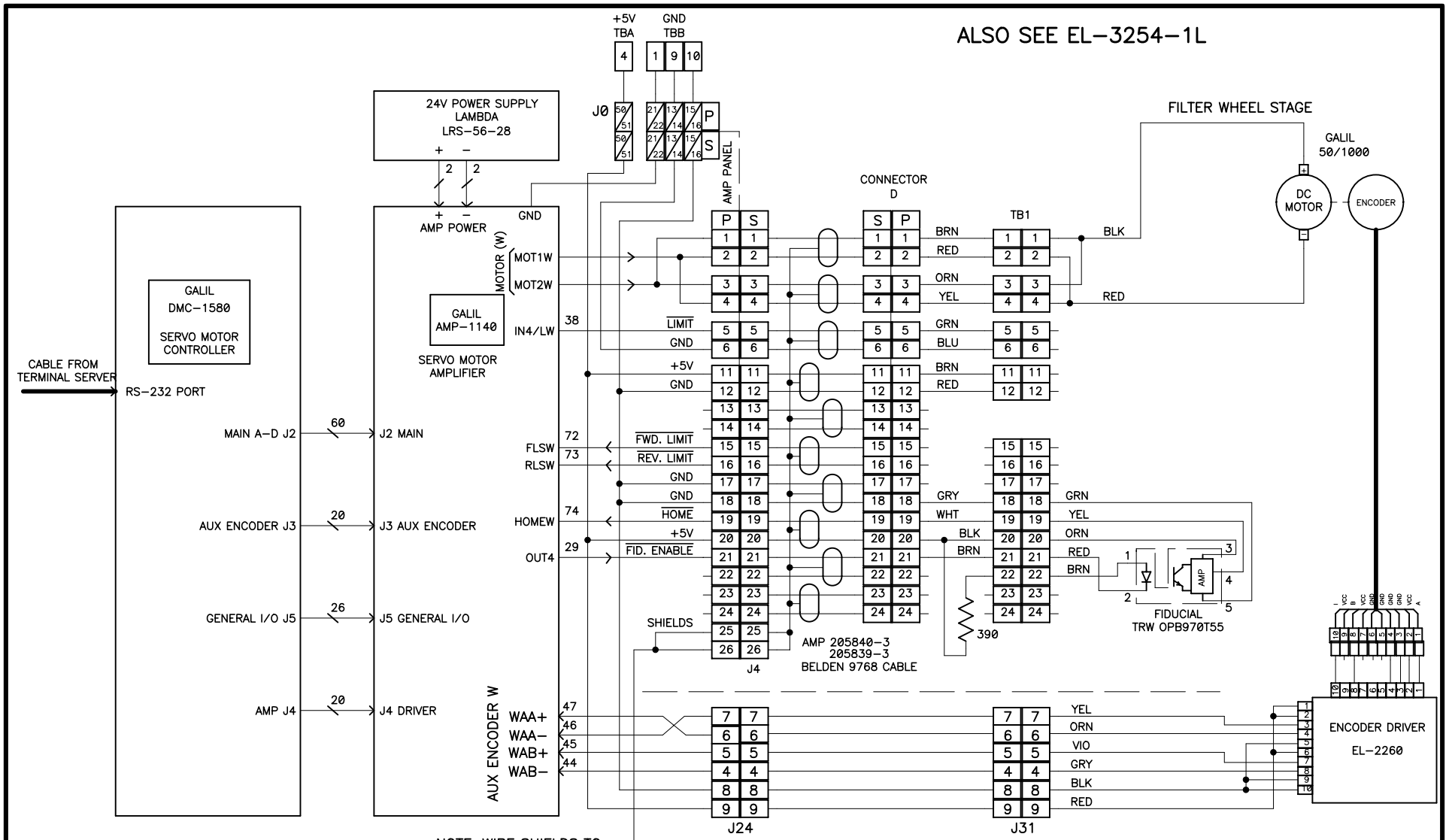

REVISION
9-17-97 SWAPPED ENCODER INPUT WITH SECONDARY ENCODER (ALSO SEE EL-3254-1L)
04-17-09 CORRECTED ENCODER WIRING AND ADDED WIRE COLORS

UNIVERSITY OF CALIFORNIA
LICK OBSERVATORY

FILTER WHEEL STAGE WIRING PRIME FOCUS CAMERA

DES'N BY: B. Alcott	ORIGIN DATE: 1/14/96	DWG. NO.	NUM. 1 OF 1
DRAWN BY:	MODIFY DATE: 04-17-09	EL-3253-1L	
PATH: PFCAM\FILWHEEL	REV. A		