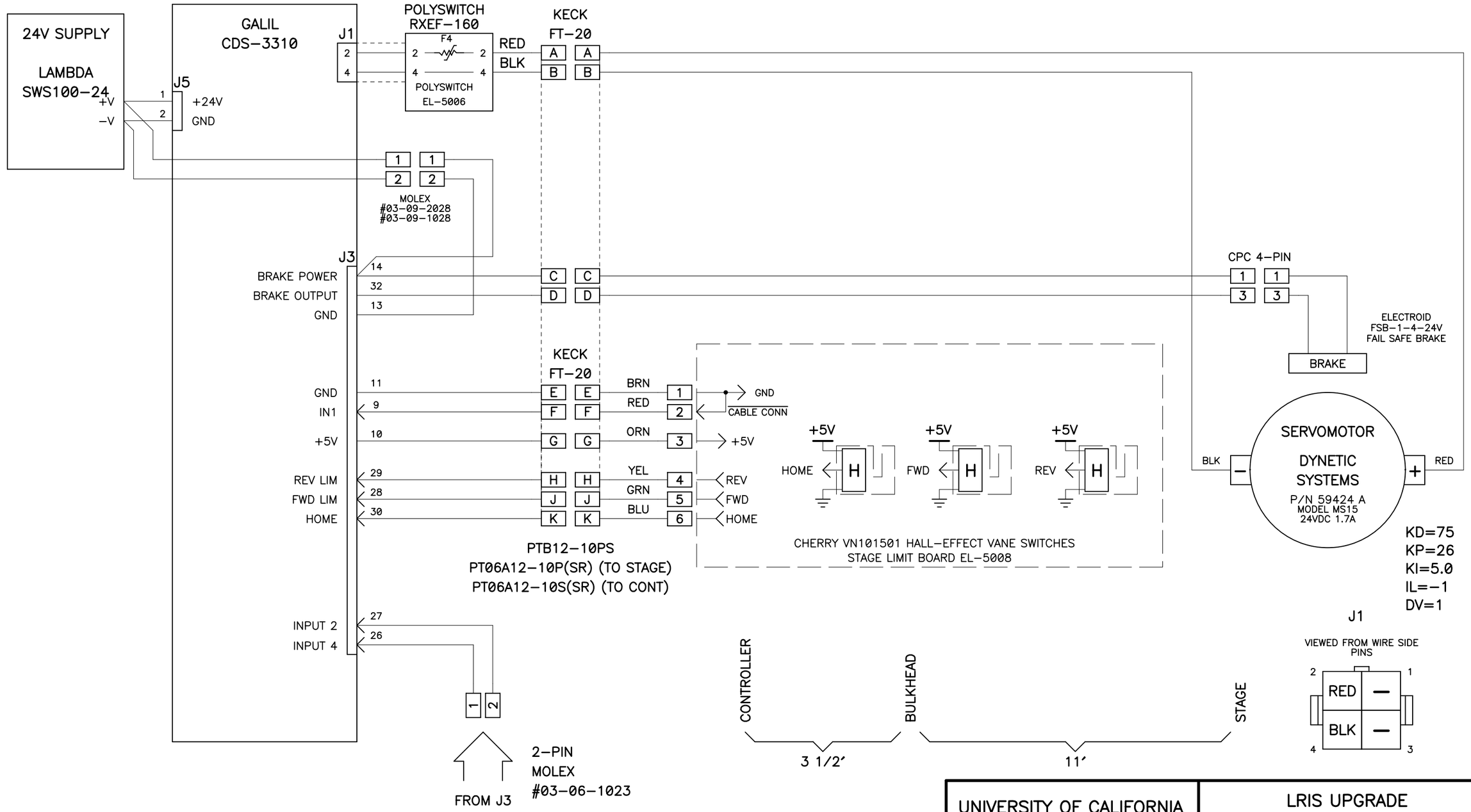

B

REVISIONS /schematics/LRIS_dewar_stage_sh_2.pdf

10-09-08 ADDED POLYSWITCH BOARD, REMOVED SECONDARY LIMITS, AND ADDED STAGE BRAKE
12-17-08 ADDED TUNING NUMBERS
01-13-09 UPDATED TUNING NUMBERS. CHANGED ENCODER CABLE DISCONECT TO INPUT 2 (LOAD/SLIDE) INPUT 4 (MOTOR ENCODER).
04-03-09 ADDED CABLES FROM 'RING OF FIRE' AND INSTRUMENT
05-08-09 ADDED CABLE LENGTHS AND REMOVED 'MIDDLE' CABLES
05-29-09 REARRANGED SCHEMATICS - VERSION C
06-23-09 CORRECTED PIN DESIGNATIONS FOR FT-20

UNIVERSITY OF CALIFORNIA
LICK OBSERVATORY

LRIS UPGRADE
CCD DEWAR FOCUS STAGE

DES'N BY: B. Alcott	ORIGIN DATE: 07-21-08	DWG. NO. EL-4250	NUM. 2 OF 3 REV. C
Last SN	MODIFY DATE: 06-23-09		
PRINT TIME: 15:07:49	PRINT DATE: Tue Jun 23, 2009		
PATH: LRIS-2007\		LRIS_dewar_stage_C.sch	

NUM. 2 OF 3

LRIS UPGRADE DEWAR FOCUS STAGE

EL-4250