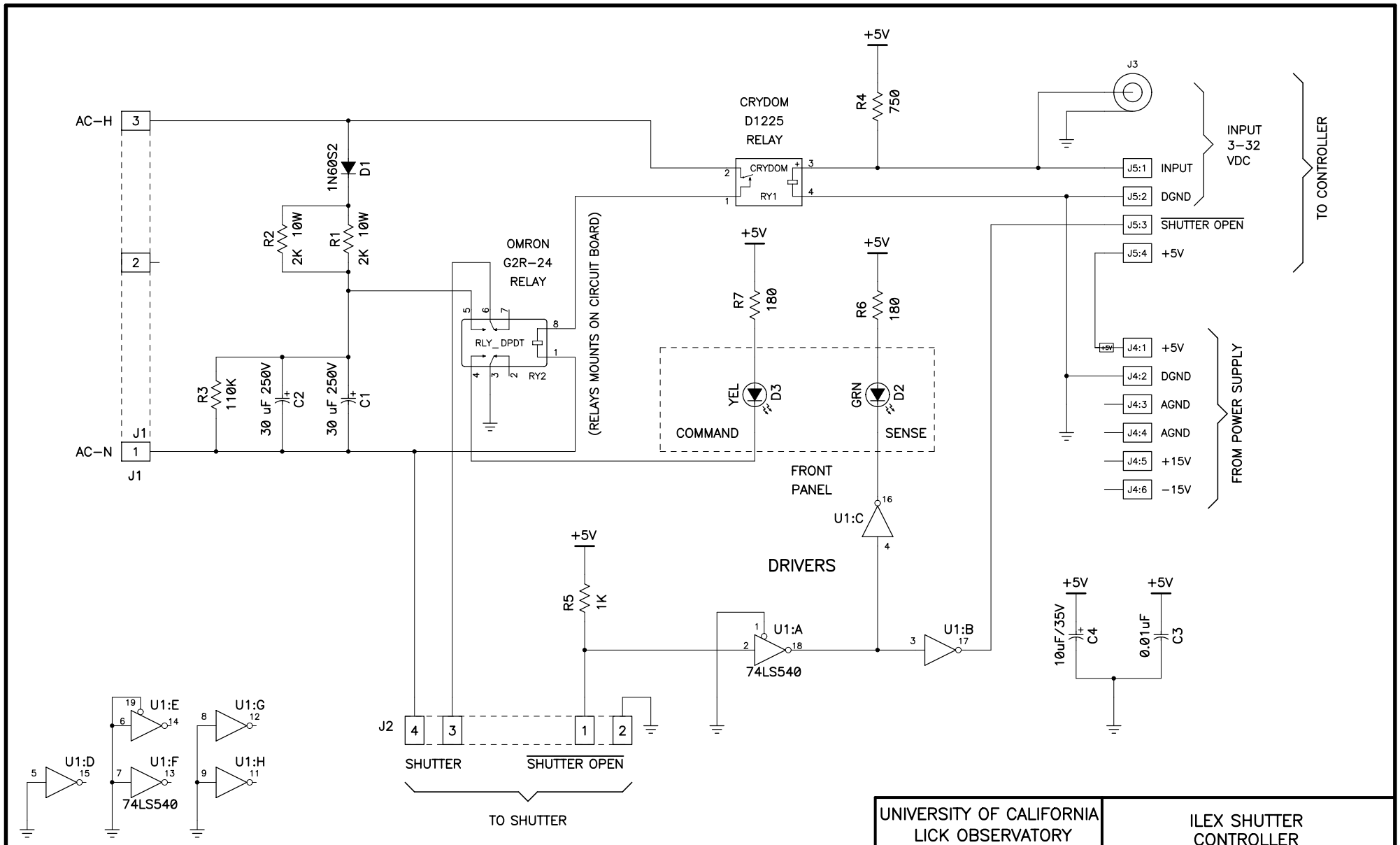

REVISIONS

11–05–03 ADDED SIGANAL DRIVER IC AND REPLACED 120VAC LED WITH NORMAL LED PER c. wRIGHT

UNIVERSITY OF CALIFORNIA LICK OBSERVATORY		ILEX SHUTTER CONTROLLER	
DES'N BY: TPR	ORIGIN DATE: 07–07–03	DWG. NO.	NUM. 1 OF 1
Last SN	MODIFY DATE: 11–05–03	EL–1093	REV. E
PRINT TIME: 11:21:26	PRINT DATE: Thu Jul 08, 2004		
PATH: GENERAL\el–1093_ilex_shutter_controller_ilexC_shut_control_revE.sch			

NUM. 1 OF 1

ILEX SHUTTER CONTROLLER

EL–1093