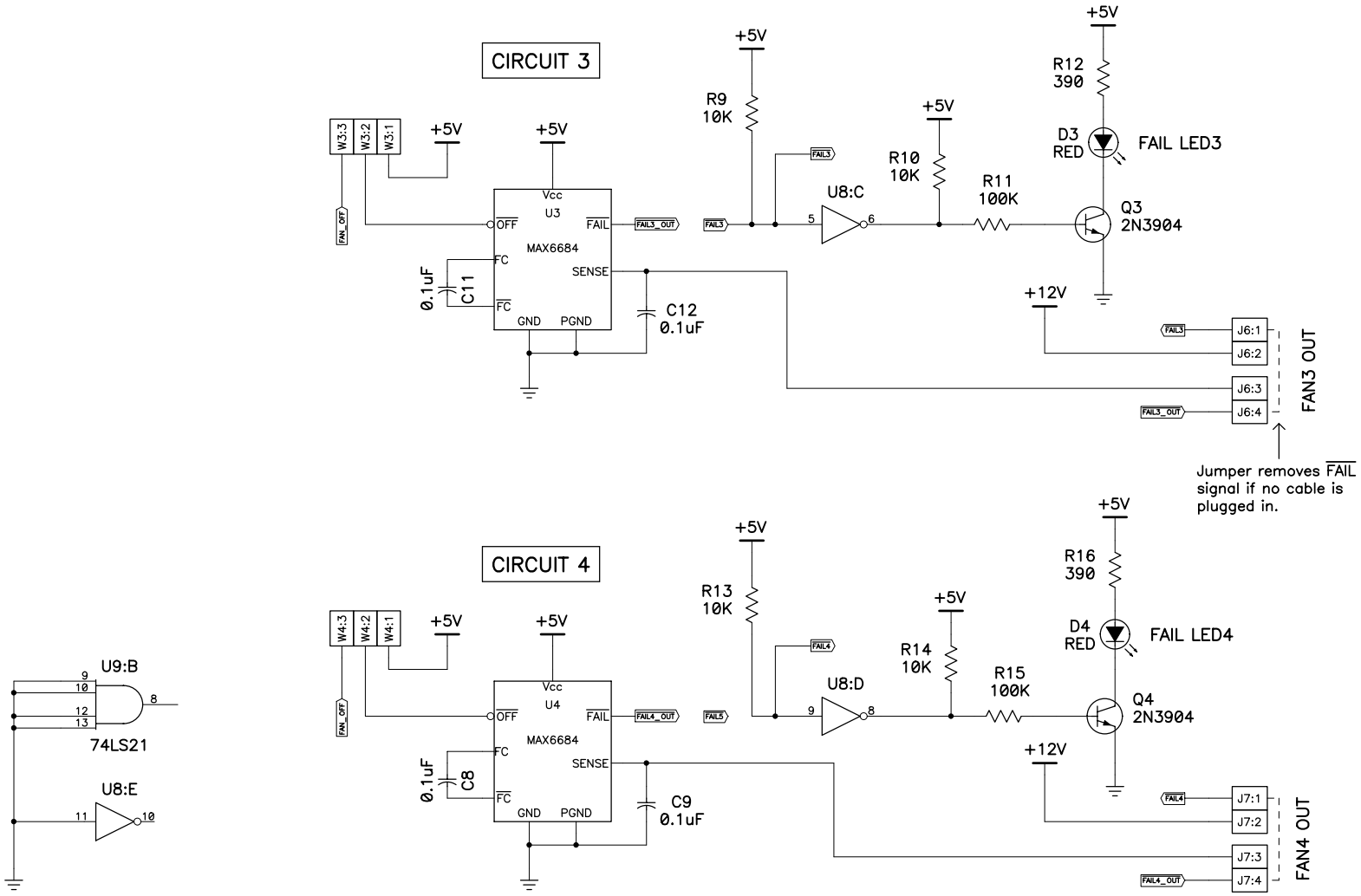

REVISIONS

UNIVERSITY OF CALIFORNIA LICK OBSERVATORY		DC BRUSHLESS FAN FAILURE DETECTOR	
DES'N BY: B. Alcott	ORIGIN DATE: 10-14-02	DWG. NO.	NUM. 2 OF 2
Last SN	MODIFY DATE:	EL-1305	REV. A
PRINT TIME: 14:47:22	PRINT DATE: Wed Jul 07, 2004		
PATH: SDSU2CCD\BOARDS\EL1305			fanfail.sch

NUM. 2 OF 2

DC BRUSHLESS FAN FAILURE DETECTOR

EL-1305