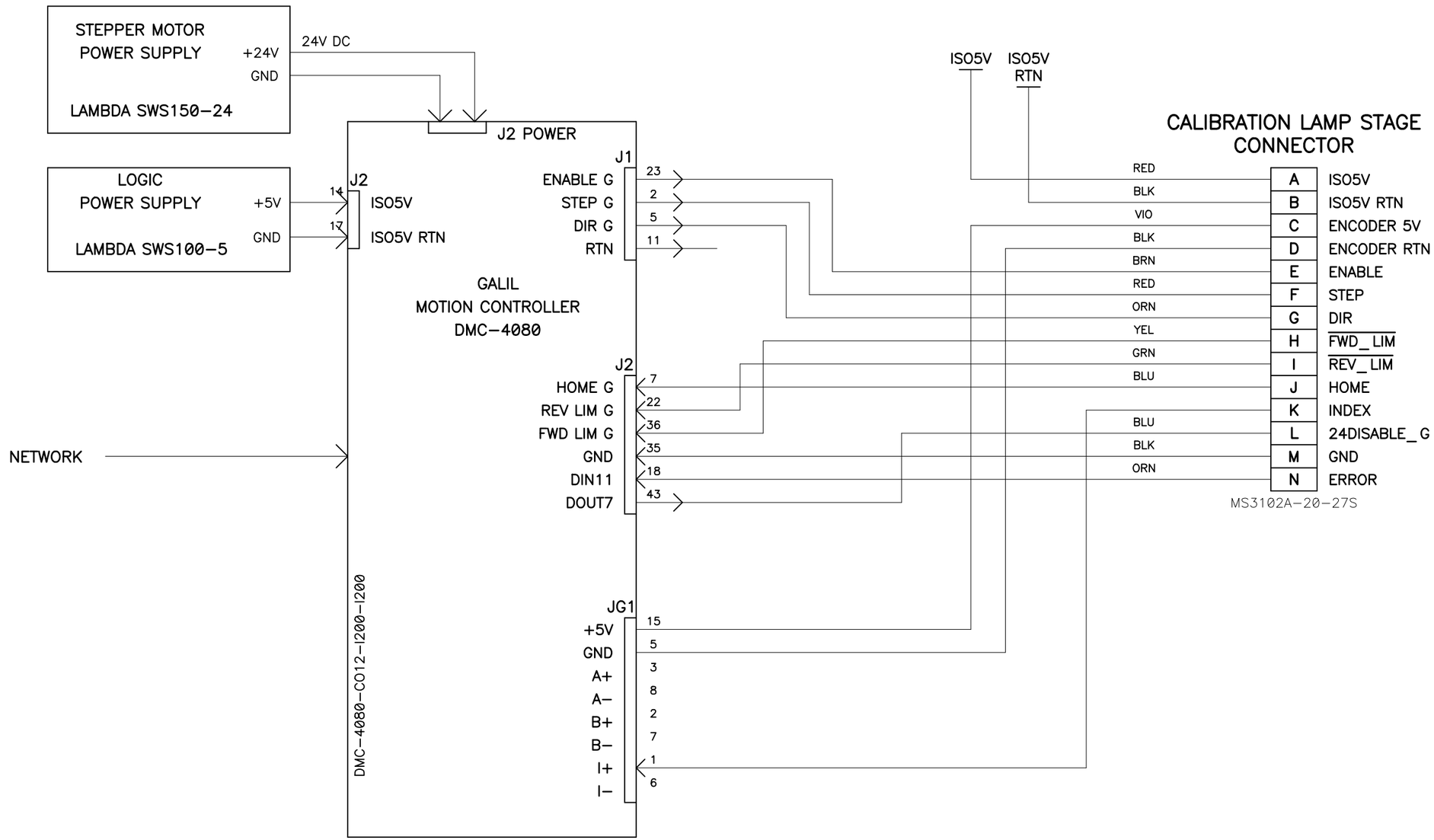

NUM. 1 OF 4

HAMILTON II CALIBRATION LAMP STAGE STAGE

REVISIONS http://loel.ucolick.org/manual/Hamilton_II/schematics/HAM_II_cal_lamp_sh_1.pdf

05-19-09 UPDATED DRAWING WITH 24V AND ERROR AND GND CORRECTIONS
06-05-09 ADDED ENCODER 5V LINES TO STAGE CABLE. NEED TO REFERENCE THEM TO USE INDEX INPUT. ALSO ELIMINATED UNUSED BRAKE SIGNAL.
02-04-10 REMOVED +24v LINE TO STAGE CONNECTOR AND ADDED 24V DISABLE SIGNAL
03-18-10 ADDED 4TH SHEET - LAMP STAGE JUNCTION BOX WIRING
07-06-10 CORRECTED STEP AND DIRECTION LABELS AND PIN NUMBERS

UNIVERSITY OF CALIFORNIA LICK OBSERVATORY		CALIBRATION LAMP STAGE HAMILTON SPECTROGRAPH II	
DES'N BY: B. Alcott	ORIGIN DATE: 04-10-07	DWG. NO.	NUM. 1 OF 4
Last SN	MODIFY DATE: 07-06-10	EL-4017	REV. A
PRINT TIME: 09:51:04	PRINT DATE: Tue Jul 06, 2010		
PATH: Hamilton_II\		HAM_II_cal_lamp.sch	

EL-4017