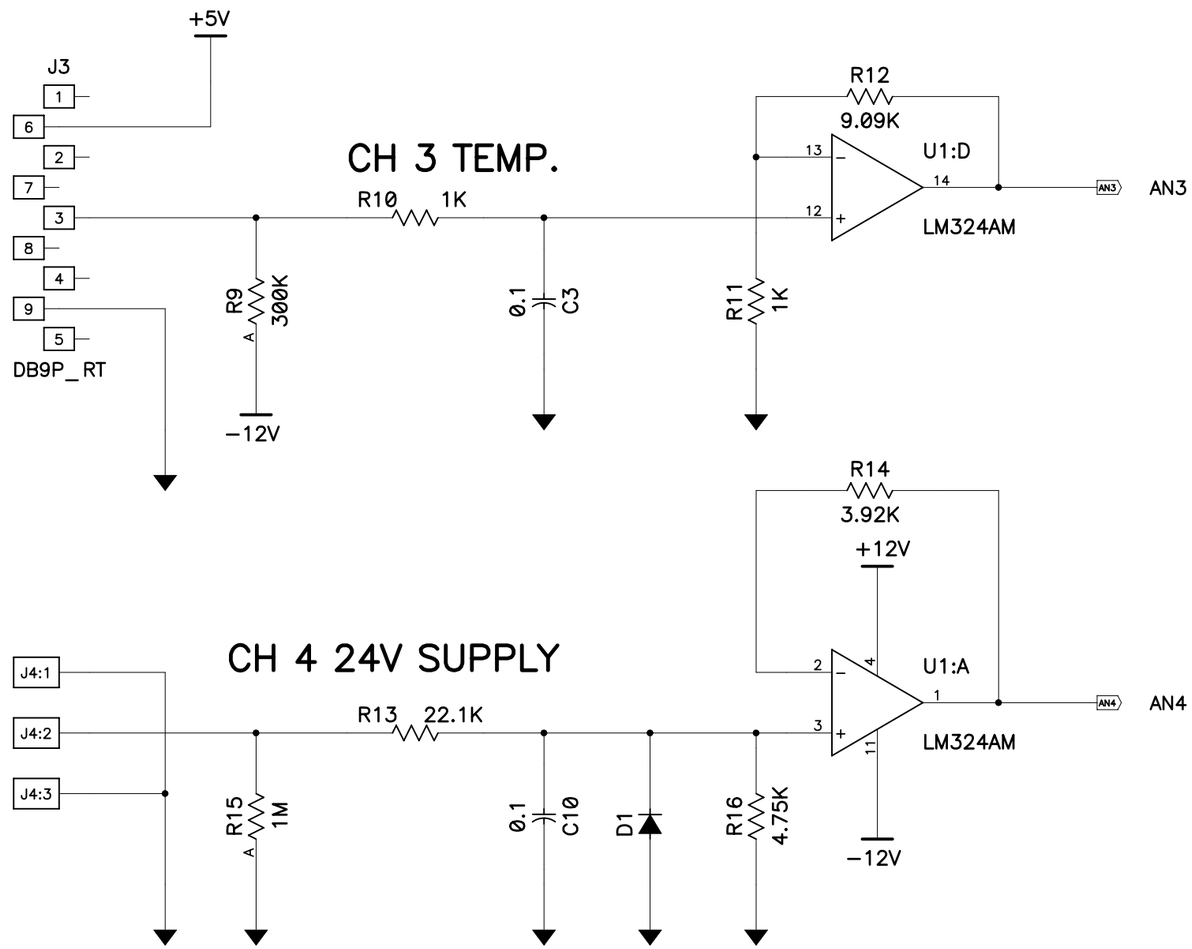


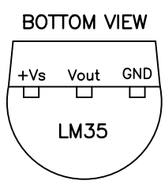


B

REVISIONS

04-14-04 CHANGED BOARD NAME TO 4 CHANNEL FROM 3 CHANNEL

| | |
|---|---|
| UNIVERSITY OF CALIFORNIA LICK OBSERVATORY | 4 CHANNEL TEMPERATURE SENSOR BOARD |

| | | | |
|---|---|---|---|
| DES'N BY: B. Alcott | ORIGIN DATE: 03-17-04 | DWG. NO. EL-1356 | NUM. 2 OF 2 |
| Last SN | MODIFY DATE: 04-14-04 | | REV. A |
| PRINT TIME: 12:56:16 | PRINT DATE: Mon Sep 14, 2009 | | |
| PATH: GENERAL\EL-1365\4ch_temp_sensor | | 4ch_temp_sensor.sch | |

NUM. 2 OF 2

4 CHANNEL TEMPERATURE SENSOR BOARD

EL-1356